DRIVE DP-A

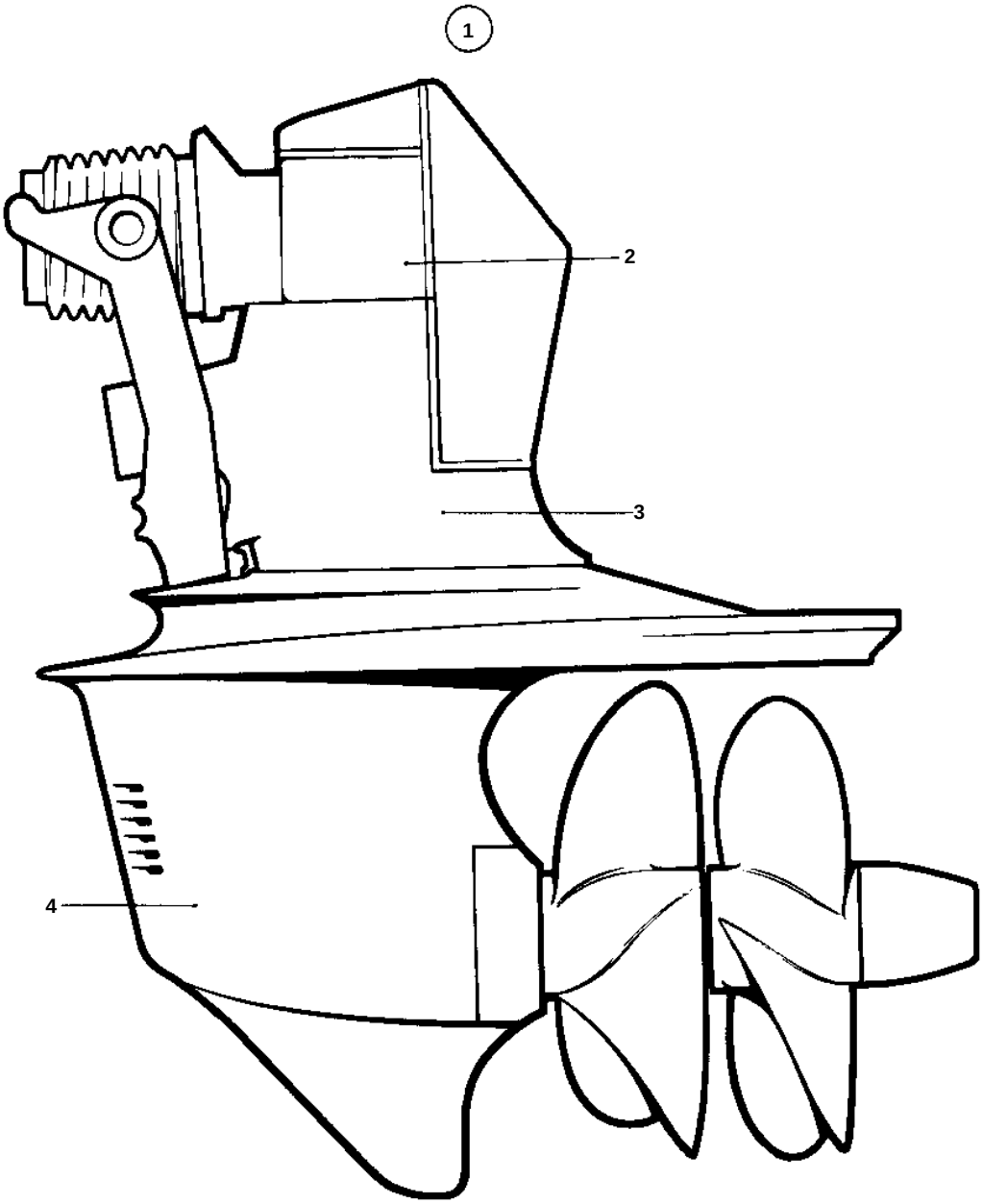

9068

DRIVE DP-A

REF	PART NO.	QTY	DESCRIPTION		SEE SEC.	NOTES
1	854021	1	Drive			E.U RATIO 1,95:1
2	854022	1	· Upper gear unit		04C-2400	
	3803114	1	· Upper gear, exchange			Exchange unit
3		1	· UPPER GEAR UNIT		04C-2500	
4	854048	1	· Gear under, LOWER GEAR UNIT			RATIO 1,95:1
					04C-2600	
	875741	1	Gasket kit			SEE GROUP 10A